SCIENCEFORECAST
Connecting Research to Drive Scientific Innovation

Research Article
Published: 11 Feb, 2019

SF Journal of Material and Chemical Engineering

Mass Production and Applications of Polymeric Hollow-Fibers Heat Exchangers

Tseng AA[1] and Raudensky M[2]*

[1]*Manufacturing Institute, Arizona State University, USA*

[2]*Heat Transfer and Fluid Flow Laboratory, Brno University of Technology, Czech Republic*

Abstract

Polymer hollow-fiber heat exchangers (PHFHEs) have recently attracted great attention because of their light-weight, low material cost, superior resistance to chemical corrosion, and low fouling deterioration as compared with those of metal-based heat exchangers. In this article, the development efforts to reduce the manufacturing cost and to enhance the applicability of the PHFHEs are presented and demonstrated. To streamline the fabrication process for making two popular types of PHFHEs is first illustrated with the goal to reduce their manufacturing cost. The two types of PHFHEs illustrated are for automotive radiators and for solar water heating systems. The manufactured prototypes are then tested and analyzed. The thermal performance results are also compared with their metallic counterpart to demonstrate the versatility of the PHFHEs. All results indicate that the PHFHEs tested are suitable to their respective target applications with much lower manufacturing cost and product weight.

Keywords: Auto radiators; Heat exchanger; Mass production; Polymer hollow-fiber; Solar water heating; Manufacturing

Introduction

Polymer heat exchangers have attracted more and more attention because of their superior properties in making heat exchangers. As compared with the traditional metallic heat exchangers, their superior properties include the high corrosion resistance, cost-effectiveness, light-weight, dual transportability, and less fouling ability. However, since the thermal conductivity of polymer materials is much lower than that of metals, polymer heat exchangers have limited successes with applications much less than that of their metallic counterparts [1,2]. Recently, polymer hollow-fiber heat exchangers (PHFHEs), which have extremely high aspect ratio (high ratio of surface-area to volume) to compensate for the decrease of the thermal performance due to the low thermal conductivity of polymer materials, have been developed and applied to several domestic and industrial usages [3,4].

Many efforts have been spent to further improve the heat transfer performances of PHFHEs [4,5] but very limited efforts have been focused on reducing their manufacturing cost which is one of the main barriers to limit the applications of PHFHEs. As a result, one of the purposes of the present study is to streamline the fabrication process for mass production of the PHFHEs to reduce the fabrication cost. The streamlined fabrication processes for making two popular types of heat exchanges, the shell-and-tube type, and cross-flow type, are illustrated. The applications of the cross-flow PHFHE to auto radiators and the shell-and-tube PHFHE to solar water heating systems are specifically studied. The thermal performances of the PHFHE auto-radiator and the PHFHE solar water-heater are evaluated and further compared with their respective metallic counterparts.

The main reason to select these two applications is that they have large impacts on our life and environment. Among others, the lightweight PHFHE radiator can lower the manufacturing cost and increase the auto's mileage, which directly reduces auto's carbon footprint to alleviate the threat of global warming. In the application for the solar water heating system, the use of PHFHEs can reduce the total system cost, which could result in more usage of solar water heating systems to reduce electricity or other energy usages. By offsetting the use of electricity or other energy resources can not only diminish the carbon footprint but also provide financial savings by reducing energy costs.

Finally, recommendations on two emerging technologies are provided in the section of

OPEN ACCESS

**Correspondence:*
Tseng AA, Manufacturing Institute, 501 E. Tyler Mall, ECG 301, Tempe, AZ 85287, USA.
Tel: 602-899-7688
Fax: 480-727-9321
E-mail: ampere.tseng@asu.edu
Received Date: 23 Dec 2018
Accepted Date: 06 Feb 2019
Published Date: 11 Feb 2019

Citation: Tseng AA, Raudensky M. Mass Production and Applications of Polymeric Hollow-Fibers Heat Exchangers. SF J Mater Chem Eng. 2019; 2(1): 1012.

ISSN 2643-8100

Copyright © 2019 Tseng AA. This is an open access article distributed under the Creative Commons Attribution License, which permits unrestricted use, distribution, and reproduction in any medium, provided the original work is properly cited.

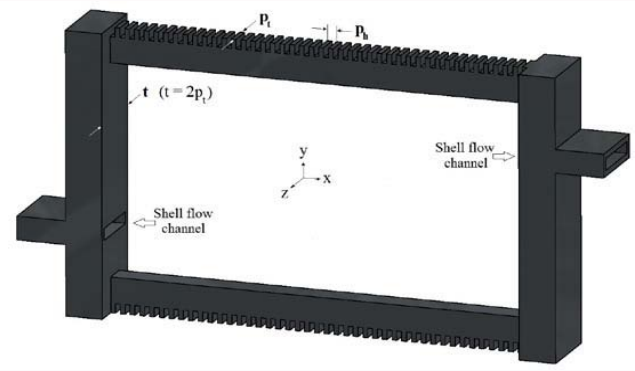

Figure 1: Injected molded layer frame for fabricating cuboid-shape shell-and-tube PHFHE, where t is frame thickness, p_t is thickness pitch, and p_h is horizontal or transversal pitch.

concluding remarks and recommendation for widening the PHFHE application, where the first one is to add nanoscale fillers to improve the strength and conductivity of the PHFHEs, while the second one is to add surfactants in the shell-side fluid for the solar water heating systems to increase their thermal performance.

Streamline Manufacturing Process for Automation and Mass Production

An automated process for fabricating PHFHEs has been developed and each major step for fabricating the typical shell-and-tube type of PHFHEs is illustrated. A special step for fabricating a cross-flow type of heat exchangers is also included in this illustration. These two types of heat exchangers are the two most popular for commercial or industrial applications [6]. The shell-and-tube type of the PHFHE for making a solar water heating system and the cross-flow type of the PHFHE used for auto-radiators are demonstrated and presented in the subsequent sections.

As its name implies, the shell-and-tube type of heat exchangers consists of a shell (a pressure vessel) with a bundle of fibers (known as tubes in conventional metal-based heat exchangers) inside it. One fluid runs through the fibers, and another fluid flows over the fibers in the shell to transfer heat between the two fluids through the fiber walls. The whole fibers can be called a fiber (tube) bundle. After completing the design phase, the dimensions and the materials for each portion of the PHFHE are available. Figures 1 to 6 show the schematics of the major fabricating steps developed for a cuboid-shape PHFHE.

First major step

As shown in Figure 1, in the first step, the layer frame made of the

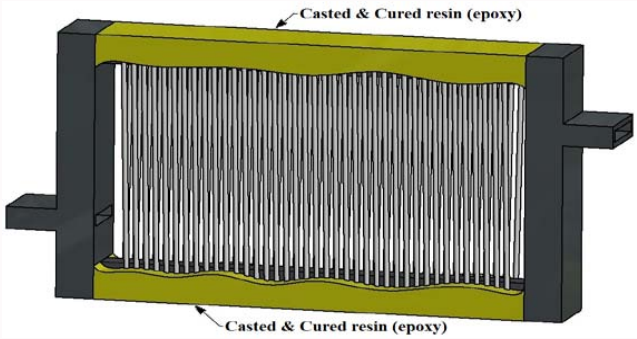

Figure 3: A resin is cast onto the horizontal frame process to consolidate wound fibers onto the plastic frame.

selected polymer can be fabricated by an injection molding process [7,8]. Other thermal plastic processes, such as compression and transfer molding [9], can also do the job but less efficient. As shown in Figure 1, the thickness of the horizontal frame is the pitch size of the fiber bundle, in the z-direction, p_t, while the vertical frame thickness, t, is the twice of the pitch size p_t, i.e. $t=2p_t$. The associated Cartesian coordinates used to define the cuboid PHFHE are shown in Figure 1. The contour size of the frame matches the shape of the x-y plane of the fiber bundle and is dependent on the heat transfer capacity or efficiency of the exchanger, while the inlet and outlet channels for the shell-side fluid are also labeled.

Second major step

The second major step is fiber winding to make two-layer fiber bundle. As shown in Figure 2a, the layer frame made in the first step is loaded on a winding machine to lay out two layers of fiber bundle by a winding machine. A pair of specially designed fixtures is used to clamp the frame to hold it during winding. As shown in Figure 2b, the fiber is wound or coiled onto the frame, in which a two-layer of polymer hollow fiber bundle is formed, where the horizontal spacing between adjacent fibers equals the horizontal pitch, p_h, as defined in Figure 1.

Third and Fourth major steps

In the third step, a resin casting or compression molding process is used to firmly ankle and glue the wound fibers onto the horizontal frame as shown in Figure 3. In resin casting, a synthetic resin, such as an epoxy mixed with a curing agent, is poured into a mold cavity to consolidate the fibers and frame together [10]. The mold is also to make the horizontal frame to level and smooth with the vertical frame. Figure 4 depicts the fourth step, a frame cutting process, for making the fiber end-openings for flowing tube-side fluid into and out of the

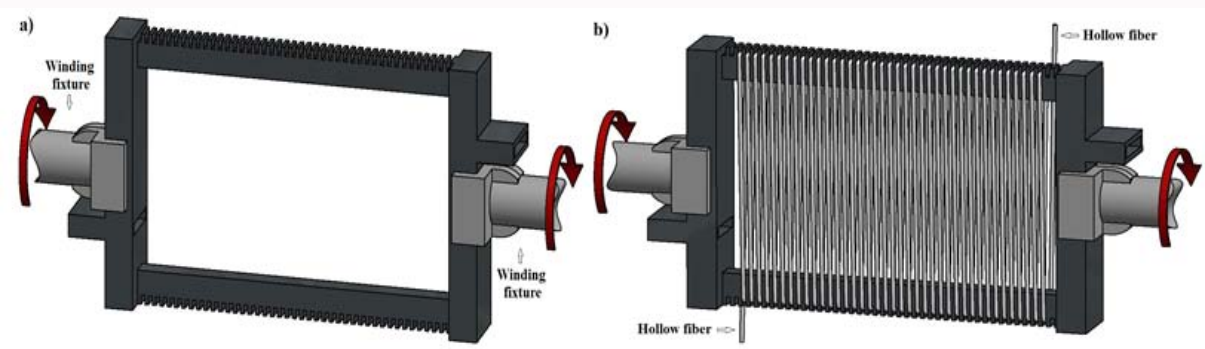

Figure 2: Winding of two-layers of polymer hollow fibers on mold frame: a) Frame loaded on winding machine by a pair of fixtures, b) Wound or coiled frame.

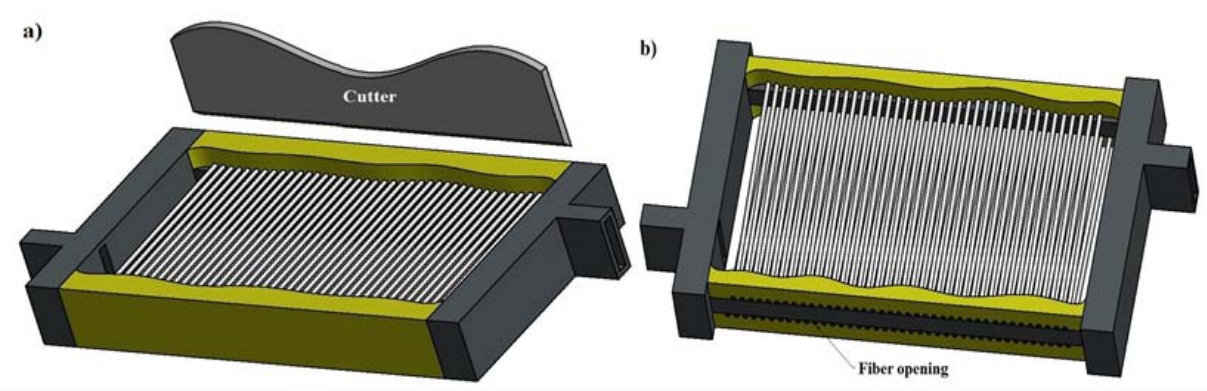

Figure 4: Horizontal frame cutting for making fiber opening: a) Before cutting; b) After cutting.

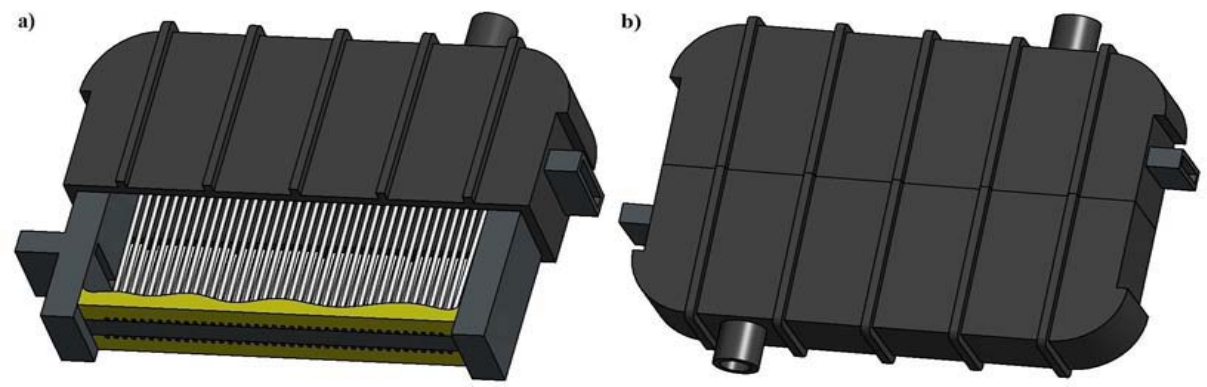

Figure 5: Shell assembling process for cuboid-shape shell-and-tube PHFHE: a) Top cover assembled to make top plenum for inlet or outlet for fiber-side flow; b) Bottom cover assembled to make full shell and bottom plenum.

inlet and outlet plenums, respectively. Before and after the resin cast frames being cut are shown in Figure 4a and 4b, respectively, where the cutter and fiber openings are also depicted.

Fifth or Last major step

The fifth or last step is a cover (shell) making and assembling process. The shell cover consists of two symmetric portions and can be made by a compression molding process [9]. As shown in Figure 5a, the top half of the two-portion cover is assembled and integrated into the top portion of the two-layer fiber bundle while the space between the top cover and the top bundle frame can serve as an inlet and outlet plenum for the fiber tube flow in the shell-and-tube PHFHE. As shown in Figure 5b, repeating the top-covering process, the bottom cover can be assembled to form a full cover of the fiber bundle and to form a bottom plenum for inlet and outlet of the fiber flow.

During assembling, dependent on the tolerance and allowance designed, the contact surface between frame and semi-cover can be coated a thin layer of glue, such as epoxy to prevent leaking during operation. The compression molding is making plastic parts similar to the forging process for making metal parts. The raw materials for compression molding are usually in the form of granules or other-shape of preforms. They are first placed in an open, heated mold cavity. The mold is then closed and pressure is applied to force the material to fill up the cavity. A hydraulic ram is often utilized to produce sufficient force during the molding process. The heat and pressure are maintained until the plastic material is cured [9]. Compression molding can handle both thermosets and thermoplastics and can make plastic parts with higher strength as compared to that of resin casting.

Automation for mass production

In mass production, the fabrication steps illustrated in this section should be integrated together for automation. Since the plastic fabrication processes adopted, including injection molding, resin casting, and compression molding, are all convenient for integrating with other automated machines, especially robots, for loading, assembling, unloading and other secondary operations [10]. However, dependent on the investment, different degrees of automation of the assembling process can be achieved by using robots, controllers, automated material handling systems, and sensor technology [11].

Special Step for Cross-Flow heat exchangers or Auto radiators

In a cross-flow design, the fluids travel roughly perpendicular to one another through the exchanger. One common example of a cross-flow heat exchanger is the radiator in an automobile, in which a hot engine-cooling fluid, like antifreeze, flows through the radiator to transfers heat to ambient air. In fabricating a PHFHE for auto radiator applications, the fifth step shown in Figure 5 should be adjusted by altering the shell cover design. As shown in Figure 6, the shell cover can be changed to a shorter one, which provides only the enclosure for the inlet and outlet plenums, while the uncovered fiber bundle area would be used for air passage for cooling the hot radiator

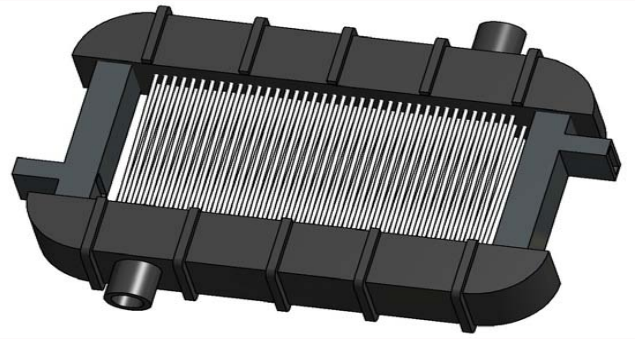

Figure 6: Cross-flow PHFHE used for auto radiator by changing shell cover to a shorter one.

fluids in an auto radiator.

Demonstrated Applications

The applications of PHFHEs for auto radiators and solar water heating system are demonstrated to illustrate the feasibility and versatility of the PHFHEs. For mass production of a PHFHE auto-radiator, the five manufacturing steps illustrated in Figures 1 to 5 should be integrated together, while, making a PHFHE for a solar water heating system, the five steps shown in Figures 1 to 4 and Figure 6 should be linked.

Application to auto radiator

Thermal analysis has been performed for a PHFHE, which has been fabricated and used for auto radiator application. Figure 7a shows an aluminum-based low-temperature radiator (LTR) used for Audi Q7 vehicle, which is a full-size crossover automobile, while the PHFHE counterpart is shown in Figure 7b. The thermal performances of these two auto-radiators shown in Figure 7 were tested and compared each other to show the versatility of PHFHEs. The core bundle weight and dimensions of the Audi Q7 are 1.4kg and 290x295x25 mm, respectively, while corresponding values of the PHFHE are 0.4kg and 290x300x40mm. The PHFHE radiator was made of 732 Polypropylene (PP) fibers with the outer diameter (OD) and inner diameter (ID) of 0.7mm and 0.6mm, respectively.

Based on the wind tunnel facility and formulas developed earlier, the heat transfer rate of the Audi Q7 LTR radiator tested at the coolant inlet temperature of 90°C, coolant flow rate of 18 l/min with an air inlet temperature of 30°C and an air velocity of 10m/s is 25kW. The heat transfer rate of the PHFHE radiator tested at the same condition is 22kW. The results indicate that the thermal performance of the PHFHE radiator is 12% lower than that of the aluminum radiator used by Audi Q7. It is expected that the size of the PHFHE radiator can increase around 12% to reach the heat transfer rate equal to that of the aluminum radiator [12]. Note that since the core weight of the PHFHE radiator is less than 30% of that of the aluminum radiator. As a result, by increasing 12% in size, the PHFHE radiator is still much lighter than that of the aluminum radiator. In additional to light-weight, the other major advantages of a PHFHE radiator should include the low material cost, low fabrication cost, high corrosion resistance, and less fouling capability.

The coolant used in testing is a 50 vol% ethylene-glycol/water solution. Since its freezing temperature is -37°C, this solution is widely used as radiator fluid. The details of the wind tunnel, the formulas adopted and the procedure for calculating heat transfer rate as well as the material properties used in calculating heat-transfer rate calculations can be found in a recent paper by Tseng and Raudensky [5].

A solid PP fiber was used to make the required PHFs, by extruding it to a hollow fiber with an outer diameter (OD) being several % larger than the required size. The extruded PHFs were then axially stretched to increase their strength to satisfy the designed requirement and to obtain the required diameter. Most of the original solid PP fibers before extrusion were obtained from Zena Membrane (www.zena-membranes.cz). The values of the OD and ID were the mean of ten measurements from the magnified cross-section photos taken from a microscope at different axial locations. The corresponding standard deviation (SD) is approximately 5% of its mean; such a relatively high SD indicates that the PHFs have sizable differences in diameter along its length. The cause for the size differences may be due to the non-isothermal temperatures arisen from the fiber extrusion or from the non-uniform axial stretching. The final PHFs were tested on leaking by air pressurizing and by immersing to colored water before the wind-tunnel tests. Also, the colored water was used to determine whether the fibers were plugged or not. The unplugged fibers were considered to be functional or active. About 1% of fibers were inactive.

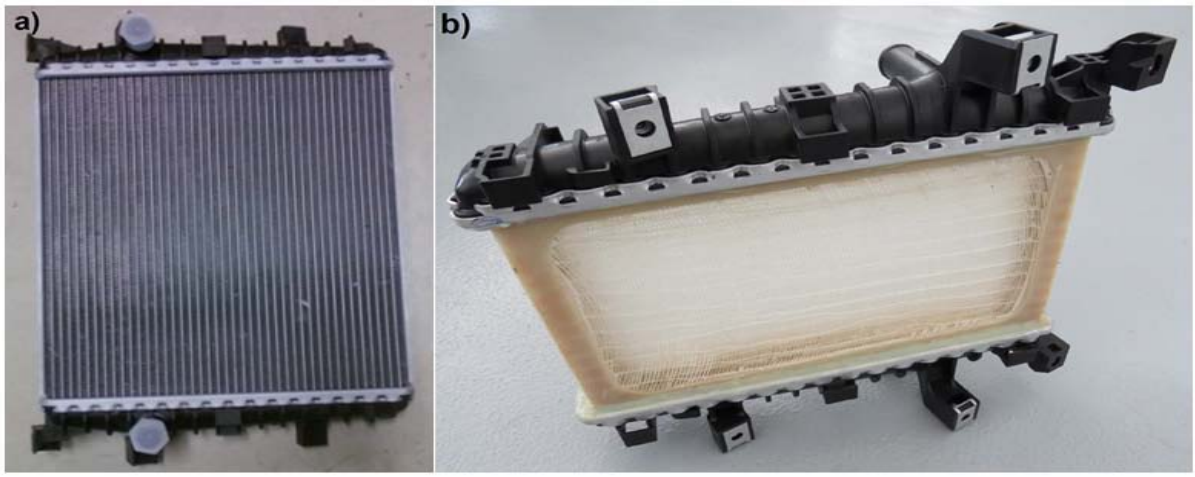

Figure 7: Auto-radiators: a) Aluminum Audi Q7 LTR radiator and b) Equivalent PHFHE auto radiator.

Application for portable solar water heating systems

Solar water heating (SWH) systems have widespread applications in both domestic and industrial sectors [13-15]. Currently, in the domestic sector, besides space heating, air conditioning, and lighting, water heating accounts for 20% of all household energy use in USA [13]. A solar water heating system consists of two major components: a solar energy collector and a heat exchanger. The solar energy collector absorbs the incoming solar energy to generate heat (not electricity) retained in a heat-transfer fluid inside the collector, which can then be transferred to heat a water for showering, space heating, or other applications by a heat exchanger. In cold weather, an antifreeze heat-transfer fluid is used to protect the solar collector from freezing.

In the past ten years, the advance in absorber coating technologies has made solar energy collectors, which can have sunlight convert efficiencies higher than 70% for water heating [14,15]. In general, the higher the sun irradiation level, the better the efficiency and the higher performance collectors. As a result, the solar energy collector can reach an efficiency of more than four times higher than that of semiconductor-based solar photovoltaic (PV) panels (currently 17% being the max.) for a given aperture area and becomes one of the most effective ways of cutting a household's carbon footprint by reducing reliance on dirty fossil fuel usage. For example, as indicated by Sadhishkumara and Balusamy [15], usage of solar water heaters to supply preheated boiler feed water can help saving 70-80% of fuel bills. Many types of the solar energy collector have been commercially available [14-16]. Those collectors can be relatively straightforward to be integrated into the PHFHE developed [16] and, thus, they would not be discussed or analyzed any further. As a result, in this section, only the development of a PHFHE used for a solar water heater is analyzed and discussed.

Based on the consumer resource for Heat Exchangers for Solar Water Heating Systems provided by the US Department of Energy [17], the cuboid-shape shell-and-tube PHFHE described earlier in Figure 5 is ideal for solar water heating systems. The figure is redrawn with the labels of the flow directions for the heat transfer fluid and water as shown in Figure 8. As shown, the shell-and-tube PHFHE can be classified as the cross-flow in-line tube heat-exchanger. The heat transfer fluid frequently is antifreeze, which can protect the solar collector from freezing in cold weather. The heated water can directly go to household usage, a storage tank, or a backup water heater.

An experiment was conducted to evaluate the thermal performance of a shell-and-tube type of PHFHEs. Figure 9a depicts the setup of the experiment, which includes a Plexiglas (PMMA) pipe with an inner diameter of 100mm is worked as the shell of the PHFHE. The PHF bundle head is made of polydiclopentadiene and has an external thread so that the bundle can easily be screwed and tied into the inside wall of the Plexiglas shell, which has a matched internal thread. The heat transfer fluid from a thermostatic tank circulated through the shell naturally, where a pump lifts the fluid up and then it flowed down through the shell. The photo image of the experimental setup is shown in Figure 9b. The temperatures and flow rates of the shell-side and fiber or tube-side fluids can be monitored and recorded by the sensors shown in the figure. The recorded data are then used to calculate the corresponding heat transfer rate and coefficient based on the procedure and formula presented by Tseng and Raudensky [5].

The PHF bundle shown in Figure 9 consists of 500PP hollow fibers, which have an average outer and inner diameters of 0.55mm and 0.45mm, respectively. The heat-transfer or shell-side fluid used in the testing is water, same as the fiber-side fluid. One of this type of PHF bundles can be fabricated less than US$10 in Czech, which is about one order magnitude lower than that of its metallic counterpart. The total heat transfer area and equivalent fiber length of 500PP hollow fibers are 0.96m^2 and 1.30m, respectively. The inlet temperature and flow rate of the heat transfer fluid (shell side) are 56°C and up to 400 l/hr, respectively. The inlet temperature and flow rate of the fiber-side liquid (tube side) are 20°C and up to 700 l/hr, respectively. The heat transfer rate from the shell-side fluid to the fiber-side water at various fiber flow rates is evaluated. The results indicated that the heat transfer rate increases from 6 to 13 kW as the fiber-side flow velocity increases from 0.01 to 0.05 m/s and the maximum heat-transfer coefficient can reach to 1,450W/m^2-K. The results also suggest that the heat-transfer coefficient can reduce greatly, if the outer diameter increases, even without changing the diameter aspect ratio. Also, as surveyed by Hobbi and Siddiqui [18], the typical hot water consumption for a single-family dwelling in North American is between 200 to 300 l/day. The flow rate range tested in the present study is more than appropriate.

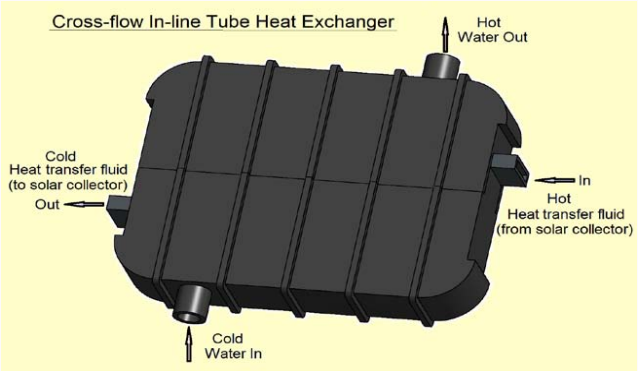

Figure 8: Cuboid-shape shell-and-tube PHFHE for Solar Water Heating Systems (cross-flow in-line tube arrangement).

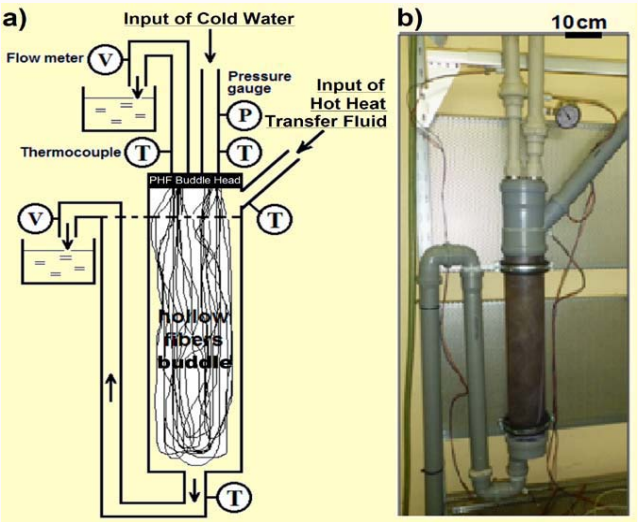

Figure 9: Experimental setup for heat transfer evaluation of shell-and-tube PHFHEs for solar water heating systems: a) Schematic, b) Optical image.

As reported by Kalogirou [14], the optimum flow rate for active or direct circulation systems is about 0.015 l/m^2 of collector area. The heat transfer rate between 6 to 13 kW is enough to accommodate a residential water-heating unit, which normally has a solar collector with an area less than 6m^2. For larger units, more hollow-fibers are needed. By mass production, the cost of the PHFHE shown in Figure 8 or 9 can be less than US$20, which is at least five-time cheaper than its metallic counterpart. In a direct circulation system, an indoor pump is used to circulate potable water from storage to the collectors when there is enough available solar energy to increase its temperature and then return the heated water to the storage tank until it is needed. Normally, a direct circulation system also has an auxiliary electric heater in the storage tank as a backup.

Concluding Remarks and Recommendations

The streamlined fabrication processes for two types of PHFHEs have been illustrated. The first type is used for solar water heating systems while the second type is for auto-radiators. The associated heat transfer rates of these two types PHFHEs are analyzed and compared with their respective metallic counterparts. All results indicate that cost reduction in the fabrication process is indeed a major factor to popularize the PHFHEs. The results also revealed that the carbon footprint can be greatly reduced by applying the PHFHEs to the auto radiator and solar water heating systems. Furthermore, the more usage of PHFHEs for the solar water heating system can result in more reduction of electricity or other energy usages, which leads to not only diminishing the carbon footprint but also providing financial savings by reducing energy costs. The lightweight PHFHE radiator can also increase the auto's mileage, which directly reduces auto's carbon footprint.

To many different industries, two emerging technologies are especially important for widening the application of PHFHEs and should be encouraged to study further. The first one is to add nanoscale high strength and thermal-conducting fillers into the polymeric resins to have a higher glass-transition temperature (as compared with PP) to form composite hollow fibers to improve the strength, thermal conductivity, and operating temperature of the PHFHE products. The recent development on using graphite nanoparticles (or nanofibers) and carbon-nanotubes (CNTs) as the fillers for making hollow fibers with higher strength and conductivity is specifically recommended. In composite materials, graphite fibers and CNTs have been widely used to modify or enhance the polymeric matrix, because their high values of Young's modulus, fracture strength, thermal conductivity, and fascinating transport phenomena can make a board range of polymeric composites for various applications [19,20]. As indicated in the cited papers, the mechanical, thermal, and tribological properties can be enhanced by adding the graphite filler. The manufacturability evaluation of the composite hollow fibers should also be encouraged.

The second technology, which is encouraged to be developed, is to add surfactants in the shell-side fluid for the solar water heating systems to increase the thermal performance of PHFHEs. By adding small amounts of polymers or surfactants can result in a significant decrease of the surface and interface tensions of the fluids, which lead to the friction drag reduction, especially for turbulent flow. Due to such reduction of frictional drag of fluid flow, the pumping power consumed for transporting fluid can be reduced significantly. The behavior of the drag or friction reduction for various aqueous solutions by adding polymers or surfactants has been investigated by many researchers [21,22]. Surfactants are normally organic compounds that are amphiphilic, meaning they contain both hydrophobic groups (in their tails) and hydrophilic groups (in their heads). A range of surfactants, including Alkyl glycosides, Ethoquad O/12, Sodium dodecyl sulfate (SDS), Sodium laureth sulfate (SLS), and Triton X (or Triton SP), is encouraged to be studied for making PHFHE auto-radiators and solar water heating systems.

Moreover, the development of the methodology for the optimal design of PHFHEs is important and should also be encouraged, especially, because the design approaches for conventional metallic heat exchangers may not be appropriate for PHFHE design. Moreover, the analytical software to assess and analyze an optimal PHFHE should be developed in understanding the associated mechanical and transport behaviors, such as temperature, pressure, and velocity variations in different operating conditions as well as the mechanical and structural integrity of the PHFHE in different service temperatures. As a final remark, the PHFHE, which is a new type of heat exchanger, has a great potential to provide many industrial applications; it would be beneficial to have a widespread communication and cooperation among the researchers in this field to have a more systematic approach, especially on those recommendations or encouragements mentioned above, towards the commercialization of PHFHEs to a wide range of industries.

Acknowledgments

The authors acknowledge the generous funding by Czech Ministry of Education, Youth and Sports under the National Sustainability Programme I (Project LO1202), which also provided the multi-year Government Endowed Chair professorship to the first author starting 2012 at the Brno University of Technology (BUT) to investigate the subject presented in this article. Special thanks are to Drs Tomas Sverak, Astrouski Ilya, Ondrej Kristof, and Jan Kominek of BUT for their helpful information and assistance in preparing this article.

References

1. Zaheed L, Jachuck RJJ. Review of polymer compact heat exchangers, with special emphasis on a polymer film unit. Applied Thermal Engineering. 2004; 24: 2323-2358.
2. T'Joen C, Park Y, Wang Q, Sommers A, Han X, Jacobi A. A review on polymer heat exchangers for HVAC&R applications. Int. J. Refrigeration. 2009; 32: 763-779.
3. Zarkadas DM, Sirkar KK. Polymeric hollow fiber heat exchangers: An alternative for lower temperature applications. Industrial & Engineering Chemistry Research. 2004; 43: 8093-8106.
4. Zhao J, Li B, Li X, Qin Y, Li C, Wang S. Numerical simulation of novel polypropylene hollow fiber heat exchanger and analysis of its characteristics. Applied Thermal Eng. 2013; 59: 134-141.
5. Tseng AA, Raudensky M. Thermal performance study of polymeric hollow-fiber heat-exchangers. Heat and Mass Transfer Research J. 2018; 2: 1-10.
6. Incropera FP, DeWitt DP. Fundamentals of Heat and Mass Transfer. 3rd ed. Hoboken, NJ: John Wiley & Sons, 1990.
7. Tseng AA, Kaplan JD. A computer-aided analysis of automatic degating molds for injection molding of plastic balls. Polymer Engineering & Science. 1994; 34: 238-248.
8. Thomas CL, Tseng AA, Bur AJ, Rose JL. Solidification sensing for closed-loop control of injection molding hold time. Advances in Polymer Technology. 1996; 15: 151-163.
9. Davis B, Gramann P, Rios A, Osswald T. Compression Molding. Munich, Germany: Hanser. 2003.

10. Naitove MH. Injection molding: automation and integration at K show. Plastics Technology. 2011; 57: 32-45.

11. Groover MP. Fundamentals of Modern Manufacturing, 4th ed. Hoboken, NJ: John Wiley & Sons, 2010.

12. Costa ALH, Queiroz EM. Design optimization of shell-and-tube heat exchangers. Applied Thermal Eng. 2008; 28: 1798-1805.

13. Shukla, R, Sumathy K, Erickson P, Gong J. Recent advances in the solar water heating systems: A review. Renewable and Sustainable Energy Reviews. 2013; 19: 173-190.

14. Kalogirou SA. Solar thermal collectors and applications, Progress in Energy and Combustion Science. 2004; 30: 231-295.

15. Sadhishkumara S, Balusamy T. Performance improvement in solar water heating systems: A review. Renewable and Sustainable Energy Reviews. 2014; 37: 191-198.

16. Apricus, Solar water heaters. Branford, CT: Apricus Solar, 2018.

17. Heat Exchangers for Solar Water Heating Systems. U.S. Department of Energy (DOE). 2018.

18. Hobbi A, Siddiqui K. Optimal design of a forced circulation solar water heating system for a residential unit in cold climate using TRNSYS. Solar Energy. 2009; 83: 700-714.

19. Sengupta R, Bhattacharya M, Bandyopadhyay S, Bhowmick AK. A review on the mechanical and electrical properties of graphite and modified graphite reinforced polymer composites. Progress in Polymer Science. 2011; 36: 638-670.

20. Sanada K, Tada Y, Shindo Y. Thermal conductivity of polymer composites with close-packed structure of nano and micro fillers. Composites Part A: Applied Science and Manufacturing. 2009; 40: 724-730.

21. Cheng JL, Mewes D, Lukthe A. Boiling phenomena with surfactants and polymeric additives: a state-of-art review. Int. J. Heat & Mass Transfer. 2007; 50: 2744-2771.

22. Zakin JL, Lu B, Bewerslorff HW. Surfactant drag reduction. Rev. Chem. Eng. 1998; 14: 255-320.